B25-33-TO-LC-X

Product State: Production

NuPhotonics

Rev. 1.0 – Oct. 2026

25G BOSA PIN-TIA & 1330 nm DFB

Description

A 1330 nm DFB laser diode for transmission and PIN Photodiode with internal TIA for receiving. The devices feature low threshold current, high bandwidth, and LC single mode fiber input. These devices are compliant with Telcordia GR-468 standards. Offering large temperature operating range. The devices can come configured with through hole leads or with a Flex-PCB mounted on the device. We can do a single Flex-PCBs that joins both photodiode and laser connections on one Flex-PCBs or individual Flex-PCBs per device.

Features

- 1330 nm Transmit wavelength
  - Built in monitor Photodiode
- 1270 nm Receive wavelength
- -40°C to 85°C operating range
- 18 GHz Cutoff Frequency
- -16 dBm receive sensitivity
- 1.5 mW optical output power
- Optional Flex-PCB with snap connector

Applications

- 25 Gigabit Ethernet

IMPORTANT NOTICE: more Information on warranty, changes, rights, notices, and other information are presented at the back of this data sheet. If the back sheet is not present, refer to www.nuphotonics.com for the company issued data sheet.

Opto-Electrical Specifications Laser

Parameter	Symbol	Unit	Min.	Typical	Max.	Test Condition
Wavelength	λ	nm	1320	1330	1340	Iop = 30 mA, Temp = 25ºC
Threshold Current	Ith	mA	-	6	12	Temp = 25ºC
Operating Current	I_o	mA	-	35	-	Temp = 25ºC
Optical power	P_{out}	mW	1.6	-	3	Iop = 30 mA, Temp = 25ºC
Forward Voltage	V	V	-	1.2	1.5	Iop = 30 mA, Temp = 25ºC
Monitor Current	Imon	uA	100	-	1000	Iop = 30 mA, Temp = 25ºC
Side mode Suppression Ratio	SMSR	dB	35	-	-	Iop = 30 mA, Temp = 25ºC
Spectral Width	Δλ	nm	-	1	-	RMS
Slope Efficiency	-	W/A	0.053	-	-	Iop = 30 mA, Temp = 25ºC
3dB Cut off Frequency	Fc	GHz	-	18	-	Iop = 30 mA, Temp = 25ºC

Opto-Electrical Specifications Photodiode

Parameter	Symbol	Unit	Min.	Typical	Max.	Test Condition
Central Wavelength	λ	nm	-	1330	-	-
Supply Voltage	V	V	-	3.3	3.6	Temp = 25ºC
Operating Current	I_o	mA	-	25	-	Temp = 25ºC
Differential output	V_{p-p}	V	-	300	350	-
Responsivity	Res	A/W	-	0.29	-	λ = 1270
Optical Sensitivity	SEN	dBm	-	-	-14	Temp = 25ºC
Saturation	Ps	dBm	-3	-	-	-
Multiplied Dark Current	I_{dm}	nA	-	-	100	Temp = 25ºC
3dB Cut off Frequency	Fc	GHz	-	19	-	Temp = 25ºC

Absolute Maximum Specifications

Parameter	Symbol	Unit	Min.	Max.	Test Condition
Forward Voltage	V_{laser}	V	-	2	-
Forward Current	I_{laser}	mA	-	120	Temp = 25ºC
TIA Supply Voltage	V_{tia}	V	-	5	Temp = 25ºC
Storage Temperature	Tstg	ºC	-50	80	-
ESD	HMD	V	-	500	-

Device Pinout

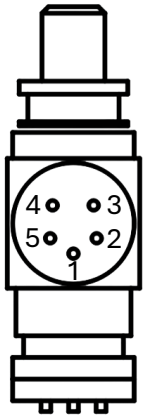

Photodiode

Pin #	Function
1	Case GND
2	Dout (+)
3	VCC
4	RSSI
5	Dout (-)

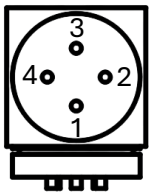

Laser

Pin #	Function
1	Laser Cathode
2	Case GND
3	LD Anode
4	PD Cathode

Mechanical Drawing

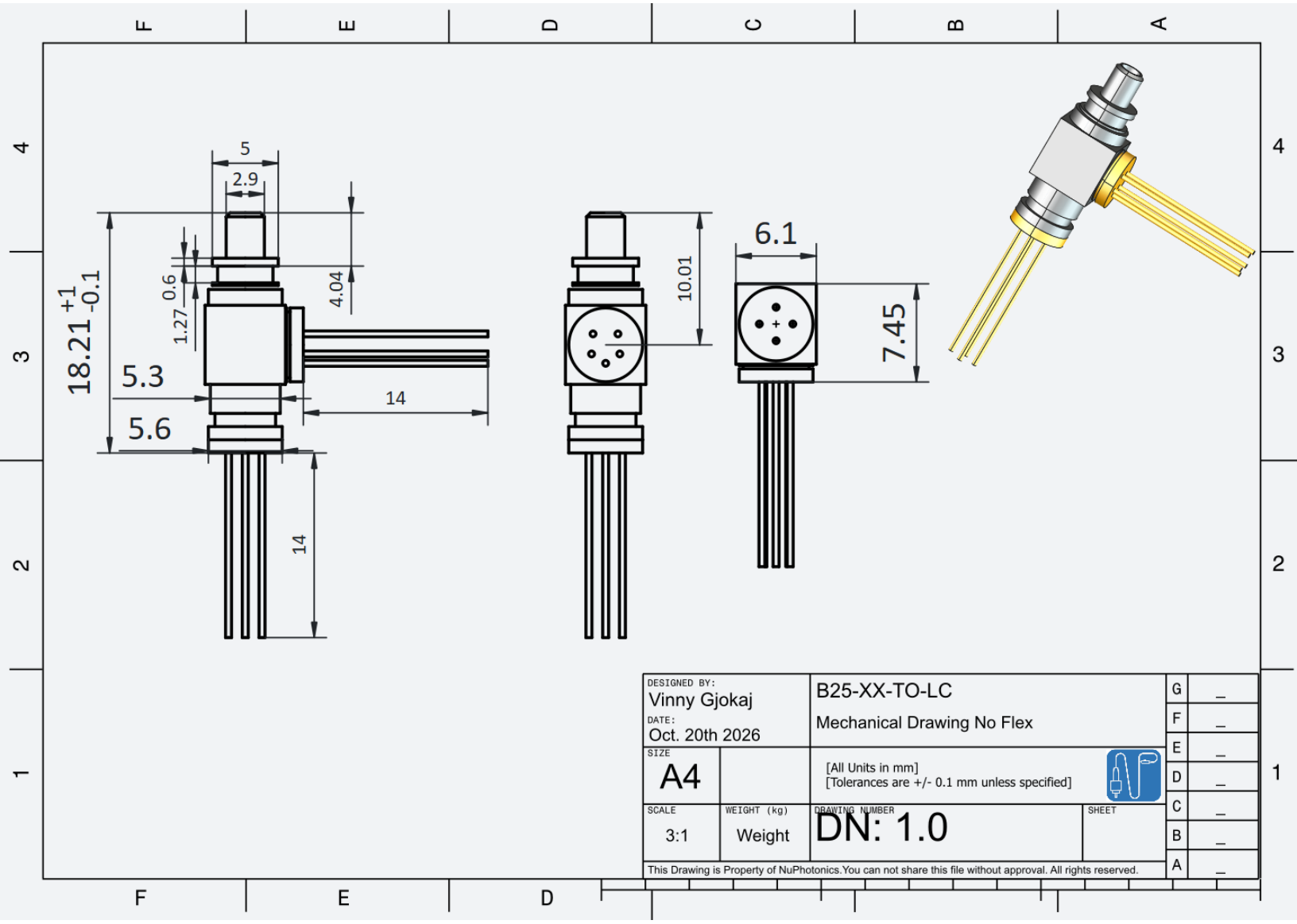

Mechanical Drawing with Flex-PCB

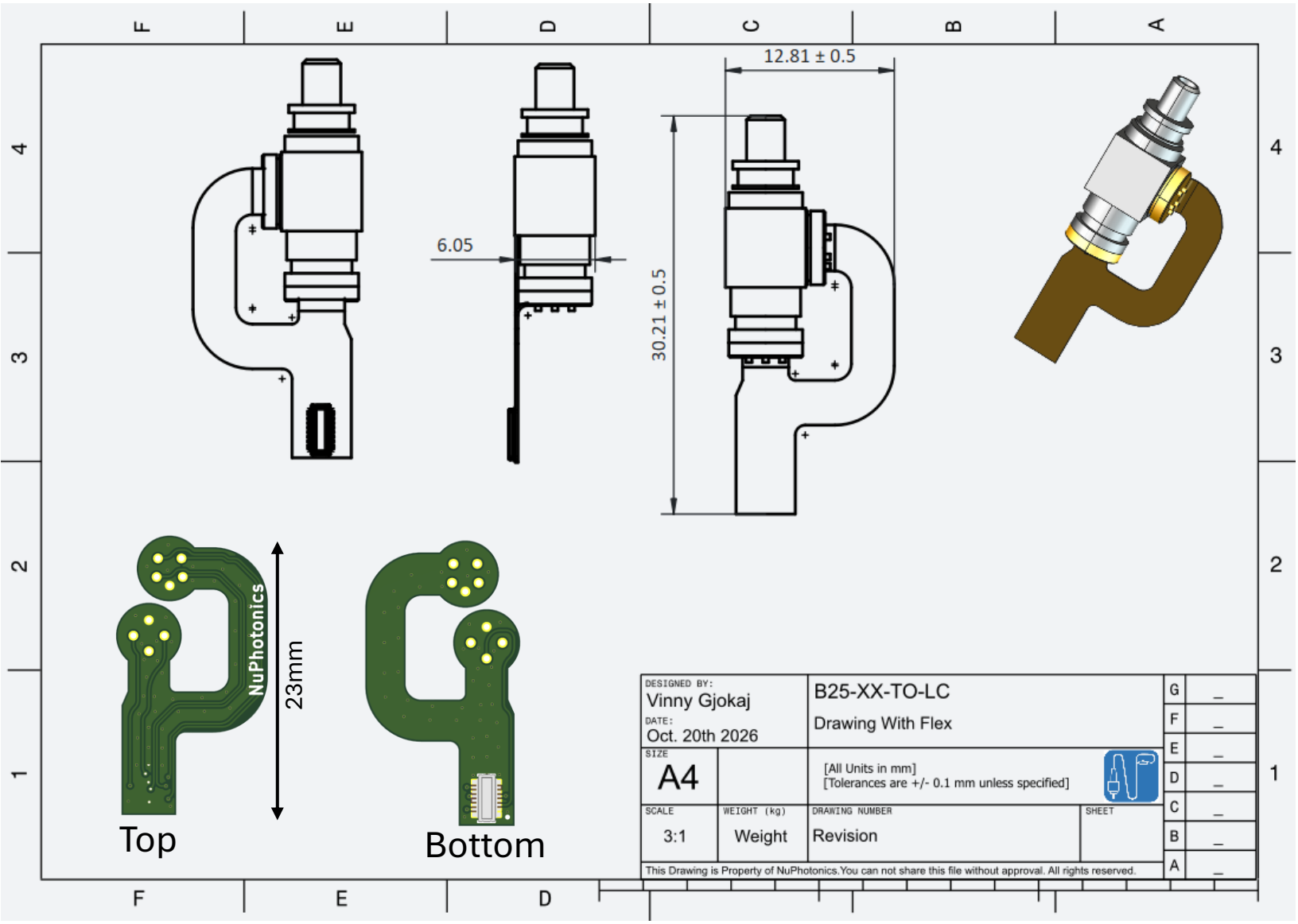

Device Nomenclature

B25-33-TO-LC-X

Product Line – 10G PIN Photodiode

Transmit wavelength – 1330 nm

Device body style – TO-CAN

Receptacle - LC

Flex-PCB Type

A – No Flex
B – Single Flex with connector
C – Single Flex with solderable fingers
D – Individual Flex

Example – B25-33-TO-LC-B

25G BOSA-LC 1330 nm TX with Single Flex-PCB with clip mating connector

IMPORTANT NOTICES AND DISCLAIMERS

Information and Warranty Disclaimer
NuPhotonics provides technical and reliability information, including datasheets, design files, application notes, and other materials (collectively, "Resources"), to assist designers who are developing applications that incorporate NuPhotonics products. These Resources are provided "as is" and "with all faults." NuPhotonics makes no warranties or representations, express or implied, regarding the Resources, including, without limitation, accuracy, completeness, reliability, or fitness for a particular purpose. NuPhotonics disclaims all implied warranties, including warranties of merchantability, fitness for a particular purpose, and non-infringement of third-party intellectual property rights.

Use of Resources
These Resources are intended for use only by skilled and qualified developers. The customer is solely responsible for selecting appropriate NuPhotonics products and for designing, validating, and testing their applications. The customer is further responsible for ensuring that their applications meet all applicable standards, safety requirements, and regulatory obligations.

Changes and Availability
NuPhotonics reserves the right to make corrections, modifications, enhancements, improvements, and other changes to its Resources and products at any time and without notice. NuPhotonics may discontinue any product or Resource without notice.

License and Restrictions
NuPhotonics grants a limited, non-exclusive, non-transferable license to use the Resources solely for the purpose of developing applications that incorporate NuPhotonics products. No other license, express or implied, is granted, including any license to third-party intellectual property. Reproduction, distribution, or display of the Resources, in whole or in part, without prior written permission from NuPhotonics is prohibited.

Limitation of Liability and Indemnification
In no event shall NuPhotonics be liable for any direct, indirect, incidental, special, consequential, or exemplary damages arising out of the use of the Resources. The customer agrees to defend, indemnify, and hold harmless NuPhotonics from and against any claims, damages, costs, losses, and liabilities arising from the customer's use of the Resources or products.

Terms and Conditions
NuPhotonics objects to and rejects any additional or different terms proposed by the customer. For complete terms and conditions of sale, refer to the Legal section at www.nuphotonics.com.

Definitions: Product State
Alpha Build – Device is in internal engineering development and testing. Specifications are subject to significant change.
Beta Build – Device is available for external evaluation and engineering sampling. Specifications are subject to minor change.
Production Build – Device is released for production. Minor cosmetic or appearance variations may occur.
Obsolete – Device is no longer in production and is not supported.

Copyright © 2026, NuPhotonics LLC

Revision History

1.0 – Oct. 2026 – Initial Release